B277, 2-Way, Characterized Control Valve
Stainless Steel Ball and Stem

Application
This valve is typically used in air handling units on heating or cooling coils, and fan coil unit heating or cooling coils. Some other common applications include Unit Ventilators, VAV box re-heat coils and bypass loops. This valve is suitable for use in a hydronic system with variable flow.

Suitable Actuators

	Non-Spring	Spring
B277	ARB(X)	AFRB(X)

Technical Data

Service	chilled, hot water, up to 60% glycol
Flow Characteristic	equal percentage
Controllable Flow Range	75°
Size [mm]	3” [80]
End Fitting	NPT female ends
Body	forged brass, nickel plated
Ball	stainless steel
Stem	stainless steel
Stem Packing	EPDM (lubricated)
Seat	Teflon® PTFE
Seat O-ring	EPDM (lubricated)
Characterized Disc	TEFZEL®
Body Pressure Rating [psi]	400
Media Temperature Range (Water)	0°F to 212°F [-18°C to 100°C]
Max Differential Pressure (Water)	30 psi
Close-Off Pressure	100 psi
Cv	70
Weight	9 lb [4.1 kg]
Leakage	0% for A to AB
Servicing	maintenance free

Dimensions (Inches [mm])

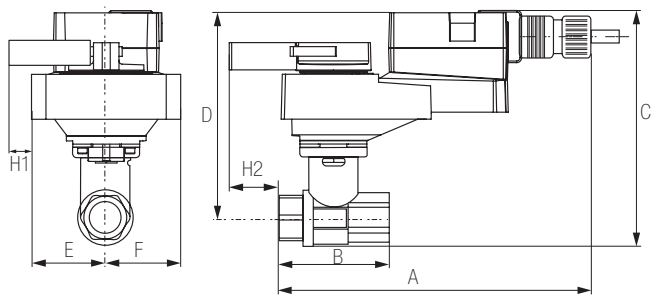

ARB, ARX

A	B	C	D	E	F	H1
10.1” [257]	5.82” [148]	8.48” [217]	5.98” [152]	2.78” [71]		2.07” [53]

Flow Pattern

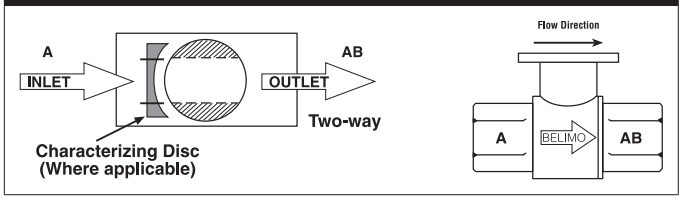

Date created, 10/27/2017 - Subject to change. © Belimo Aircontrols (USA), Inc.

Dimensions (Inches [mm])

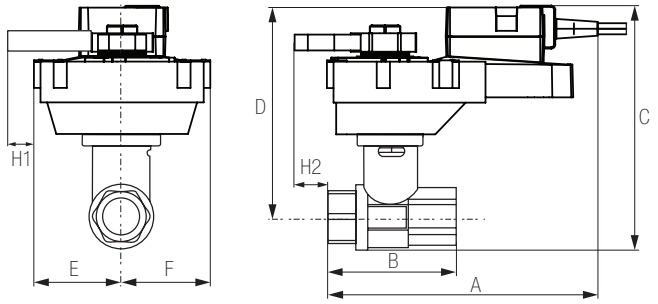

ARQB, ARQX

A	B	C	D	E	F	H1	H2
9.9” [251]	4.21” [107]	8.61” [220]	6.11” [155]	2.28” [58]		0.75” [20]	0.5” [15]

Dimensions (Inches [mm])

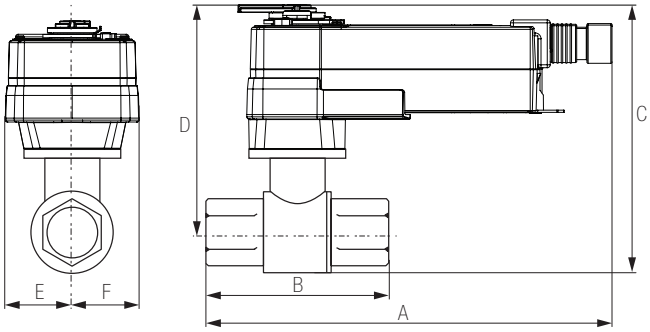

AFRB, AFRX

A	B	C	D	E	F
11.77” [299]	5.82” [148]	9.11” [231]	6.61” [168]	2.02” [51]	

Dimensions (Inches [mm])

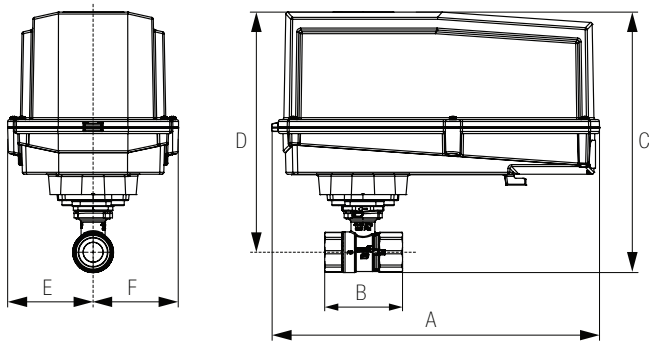

AFRB N4, AFRX N4

A	B	C	D	E	F
12.98” [330]	5.82” [148]	10.29” [261]	9.24” [235]	3.39” [86]	

Dimensions (Inches [mm])

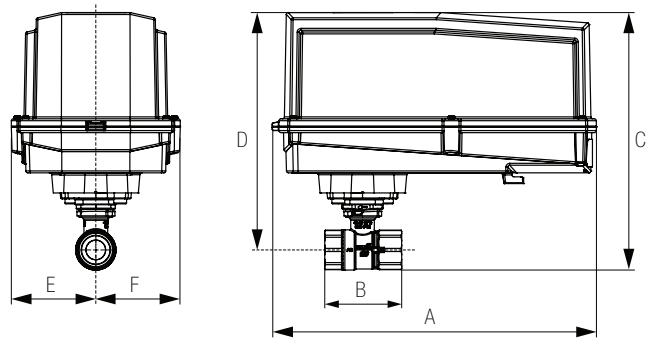

ARB N4, ARX N4, NRB N4, NRX N4

A	B	C	D	E	F
11.36” [289]	5.82” [148]	10.74” [274]	8.01” [204]	3.15” [80]	

Date created, 10/27/2017 - Subject to change. © Belimo Aircontrols (USA), Inc.

AFRX24-MFT N4

NEMA 4, Modulating, Spring Return, Direct Coupled, 24 V, Multi-Function Technology®

Technical Data	
Power Supply	24 VAC ± 20%, 50/60 Hz, 24 VDC ± 10%
Power Consumption Running	7.5 W
Power Consumption Holding	3 W
Transformer Sizing	10 VA (class 2 power source)
Electrical Connection	3ft [1m], 18 GA appliance cable with 1/2" conduit connector
Overload Protection	electronic throughout 0° to 95° rotation
Operating Range Y	2 to 10 VDC, 4 to 20 mA w/ ZG-R01 (500 Ω, 1/4 W resistor), variable (VDC, PWM, floating point, on/off)
Input Impedance	100 k Ω for 2 to 10 VDC (0.1 mA), 500 Ω for 4 to 20 mA, 1500 Ω for PWM, floating point and On/Off
Feedback Output U	2 to 10 VDC, 0.5 mA max, VDC variable
Angle of Rotation	90°
Direction of Rotation (Motor)	reversible with switch
Direction of Rotation (Fail-Safe)	reversible with CW/CCW mounting
Position Indication	visual indicator, 0° to 95° (0° is full spring return position)
Manual Override	5 mm hex crank (3/16" Allen), supplied
Running Time (Motor)	150 sec (default), variable (70 to 220 sec)
Running Time (Fail-Safe)	<20 sec
Angle of Rotation Adaptation	off (default)
Override Control	min. position = 0% , mid. Position = 50% , max. position = 100% (Default)
Ambient Temperature Range	-22°F to 122°F [-30°C to 50°C]
Storage Temperature Range	-40°F to 176°F [-40°C to 80°C]
Housing	NEMA 4, IP66, UL enclosure type 4
Agency Listings†	cULus acc. to UL60730-1A/-2-14, CAN/CSA E60730-1:02, CE acc. to 2004/108/EC and 2006/95/EC
Noise Level (Motor)	<45 dB (A)
Noise Level (Fail-Safe)	<62 dB (A)
Servicing	maintenance free
Quality Standard	ISO 9001

†Rated Impulse Voltage 800V, Type of Action 1, Control Pollution Degree 2.

Date created, 08/14/2017 - Subject to change. © Belimo Aircontrols (USA), Inc.

Wiring Diagrams

INSTALLATION NOTES

(A) Actuators with appliance cables are numbered.

△1 Provide overload protection and disconnect as required.

△3 Actuators may also be powered by 24 VDC.

△5 Only connect common to negative (-) leg of control circuits.

△7 A 500 Ω resistor (ZG-R01) converts the 4 to 20 mA control signal to 2 to 10 VDC.

△8 Control signal may be pulsed from either the Hot (Source) or Common (Sink) 24 VAC line.

△10 For triac sink the Common connection from the actuator must be connected to the Hot connection of the controller. Position feedback cannot be used with a triac sink controller; the actuator internal common reference is not compatible.

△12 IN4004 or IN4007 diode. (IN4007 supplied, Belimo part number 40155).

△46 Actuators may be controlled in parallel. Current draw and input impedance must be observed.

△47 Master-Slave wiring required for piggy-back applications. Feedback from Master to conrol input(s) of Slave(s).

♦ Meets cULus requirements without the need of an electrical ground connection.

! WARNING! LIVE ELECTRICAL COMPONENTS!

During installation, testing, servicing and troubleshooting of this product, it may be necessary to work with live electrical components. Have a qualified licensed electrician or other individual who has been properly trained in handling live electrical components perform these tasks. Failure to follow all electrical safety precautions when exposed to live electrical components could result in death or serious injury.

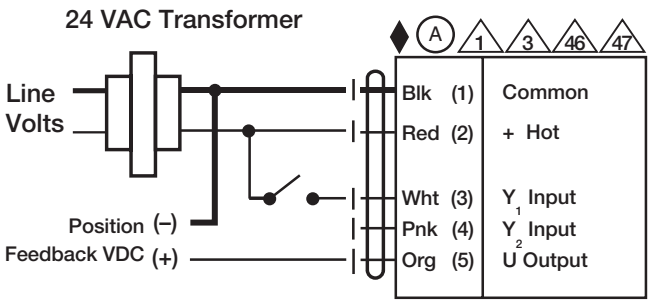

On/Off

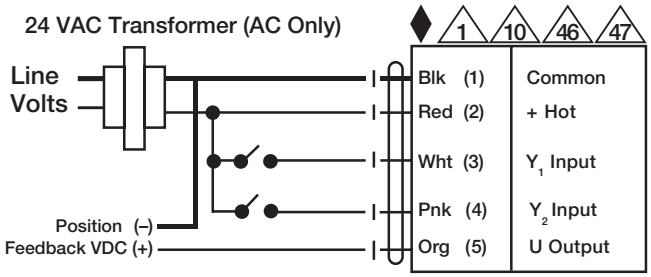

Floating Point

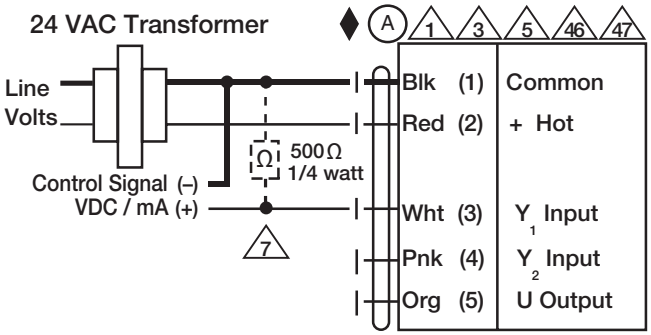

VDC/mA Control

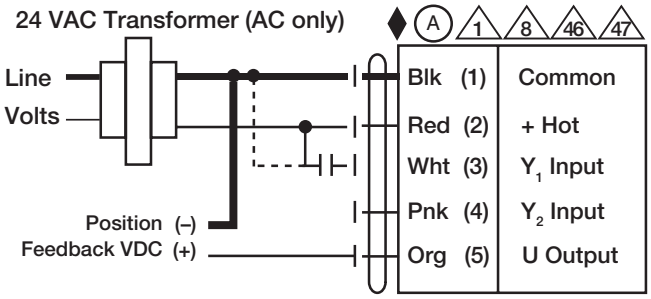

PWM Control

Date created, 08/14/2017 - Subject to change. © Belimo Aircontrols (USA), Inc.

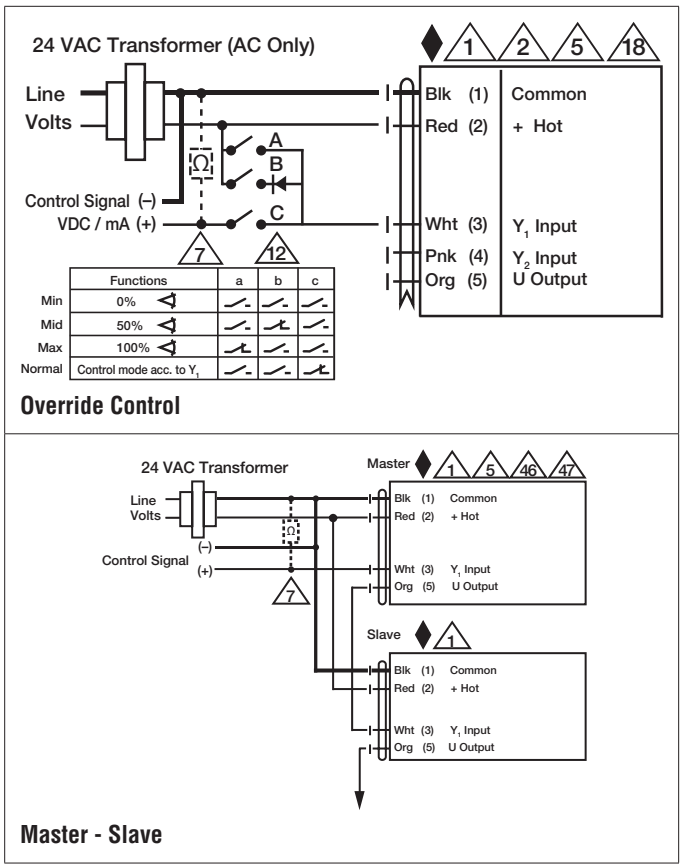

Date created, 08/14/2017 - Subject to change. © Belimo Aircontrols (USA), Inc.